24 February 2014

Agreement

Concerning the Adoption of Uniform Technical Prescriptions for Wheeled Vehicles, Equipment and Parts which can be Fitted and/or be Used on Wheeled Vehicles and the Conditions for Reciprocal Recognition of Approvals Granted on the Basis of these Prescriptions*

(Revision 2, including the amendments which entered into force on 16 October 1995)

Addendum 28 – Regulation No. 29

Revision 1 - Amendment 3

Supplement 2 to the 02 series of amendments – Date of entry into force: 13 February 2014

Uniform provisions concerning the approval of vehicles with regard to the protection of the occupants of the cab of a commercial vehicle

UNITED NATIONS

* Former title of the Agreement: Agreement Concerning the Adoption of Uniform Conditions of Approval and Reciprocal Recognition of Approval for Motor Vehicle Equipment and Parts, done at Geneva on 20 March 1958.

Please recycle

*Paragraph 5.3.*1., *amend to read*:

"5.3.1. After undergoing each of the tests referred to in paragraph 5.2. above, … the assessment of the survival space. As an alternative to the test manikin defined in Annex 3, Appendix 2, a fiftieth percentile Hybrid II or III male dummy, with or without measuring instrumentation, the description of which is given in Regulation No. 94, may be used."

Annex 3,

Appendix 2,

The figure, amend to read:

"

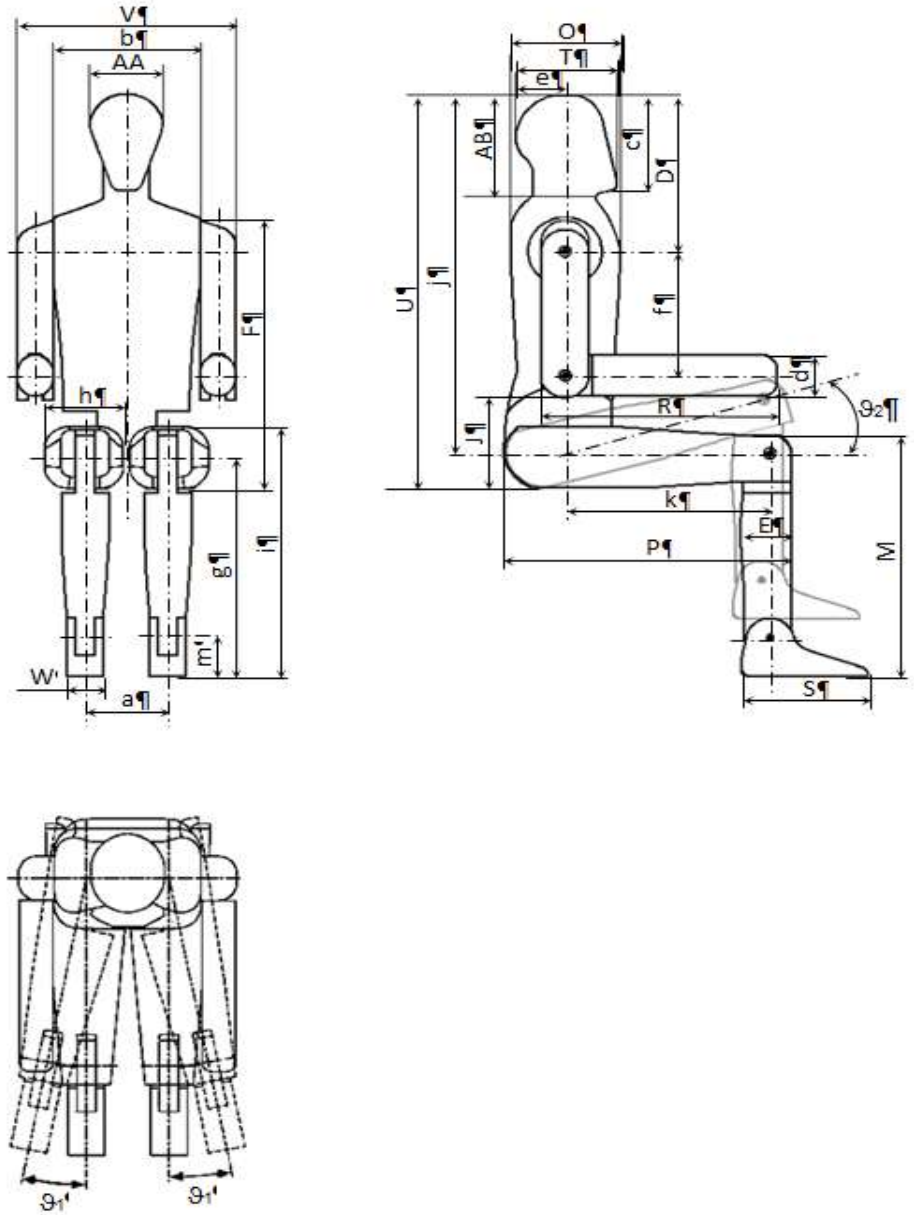

"

The table, amend to read:

"

Dimensions:	…		… cm
	…		…
	ϑ_1 Lateral rotation of the legs	20°	
	ϑ_2 Upward rotation of the legs	45°	

"